INFINIUM™ LED SERIES
4" LED DOWNLIGHT
18 WATT MAX

E4LED SPECTRUM INFINIUM™

FEATURES & SPECIFICATIONS:

- Round 15/18 watt LED downlight series.
- All LED modules and drivers are replacable and up-gradeable.
- 50,000 hours rated LED system life.
- Trim supports a variety of lens /accessory options.
- Intended for Non-IC new construction.
- Frame constructed of 20 ga. aluminum.
- Supplied with 27" long, heavy ga. galvanized steel bar hangers.
- Dimming available. (see page 1-444).
- EM available. (see page 1-446).
- Manufactured and built to UL standard No 1598.

Max Ceiling Thickness:	1.5 (38.1 mm)
Ceiling Cutout:	4.6 ø (116.8 mm ø)
Fixture Weight:	4.0 lbs

KELVIN°	WATTAGE	LUMENS
27K°	15W	780
	18W	1100
31K°	15W	925
	18W	1220
35K°	15W	1050
	18W	1350
41K°	15W	1180
	18W	1475

*Other wattages and Color temps (K°) available. Contact Factory

CROSS-SECTION

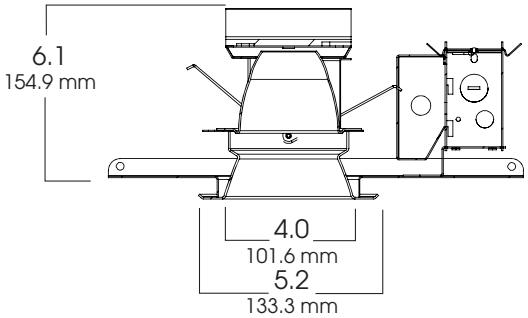

TOP VIEW

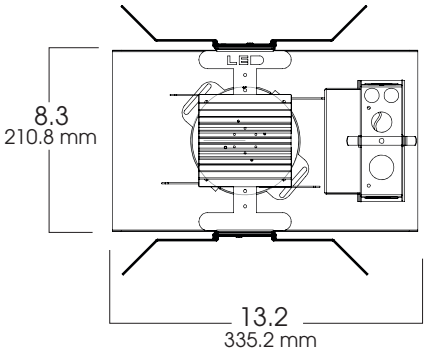

SERIES	LED	KELVIN	VOLTAGE	OPTIONS	TRIM / FINISH	TRIM OPTIONS
SGE4LED- Spectrum Infinium 4" LED Downlight	**15w** **18w**	**27K** -2700° K **31K** -3100° K **35K** -3500° K **41K** -4100° K	**E1** -Electronic,120V **E2** -Electronic,277V **DS2W1*** -Spectrum 2 Wire Phase Dimming, 120v (15w only) **DS101** -Spectrum 0-10v Dimming, 120v **DS103** -Spectrum 0-10v Dimming, 277v **DLTE1** -Lutron 2 Wire Phase Dimming 120v Only **DL33X** -Lutron Hi-Lume Dimming 120v/277v **DL3EX** -Lutron ECOSYSTEM Dimming 120v/277v Dimming: See Page 1-444	**IC** -Insulated Ceiling **BH6** -Expandable Bar Hangers, 6" - 12" **BH12** -Expandable Bar Hangers, 12" - 24" **CB24** -C-Channel bars (1-470) **FS** -Fusing **CCEA** -Chicago Ceiling Plenum CCEA (1-480) **CR** -Corrosion Resistant (1-460) **PR** -Plaster Ring (1-430) **TBC** -T-bar clips (1-475) **EMLED** -Emergency Back-up Battery (1-423) **GR** -Goof Ring (1-470) **SCA** -Slope Ceiling Adaptor (1-435)	**AR4466-MW** -Matte White (standard) **SG** -Semi-Diffuse Low Iridescent **HZ** -Matte Low Iridescent **WE** -Wheat Alzak **MB** -Matte Black **CC** -Custom Color **PF** -Polished Flange **WF** -White Flange	**SO** -Micro Prism Solite™ lens (standard) **PG** -Prismatic Glass Lens **GL** -Clear Glass Lens **FG** -Frosted Glass Lens **GS** -Gasket **WL** -Wet Location **DEC** -Decorative Trim
SGE4LED	**18W**	**31K**	**E1**	**EMLED**	**AR4466 SG**	**GS**

Dimensions shown are nominal. Spectrum Lighting is continually improving products and reserves the right to make changes that will not alter performance or appearance with or without written notice.

PROJECT:	TYPE:
CAT. NO.:	

MADE IN THE USA

SPECTRUM LIGHTING, INC
www.speclight.com

994 Jefferson Street, Fall River, MA 02721 508.678.2303 FAX 508.678.2260